Engineered Systems

Custom Design and Manufacture of Steam, Hydronic and Thermal Fluid Systems

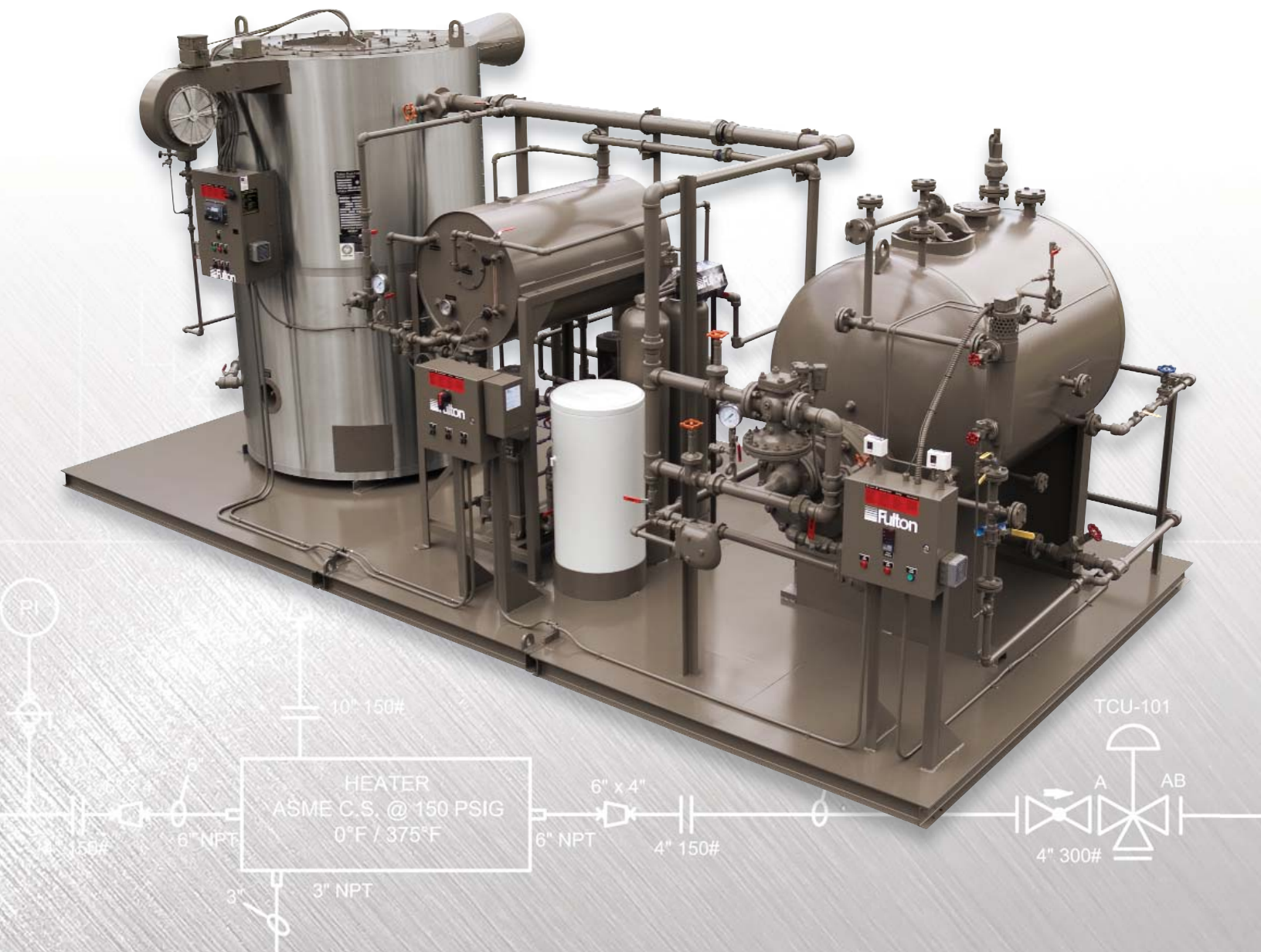

Introduction

Overview

Fulton is a family owned company with global manufacturing capabilities, headquartered in Pulaski, New York. Fulton first started with a revolutionary design for vertical steam boilers in 1949. By dedicating R&D resources to product improvement and development, Fulton has expanded its product lines to include hot oil systems and hydronic heating products. Fulton has built its reputation upon manufacturing a robust, quality product and its innovative approach to product development. As demand for creative solutions to complex heat transfer applications grows, Fulton has excelled in the design and fabrication of customized skid system solutions. With over three decades of experience in designing and building skid systems, Fulton has become a single source manufacturer for custom pre-piped heat transfer equipment and accessories. Today, Fulton engineered systems may be found in a variety of applications including: clean steam generation, sterilization, humidification, building heat, adhesives, chemical processing and food processing.

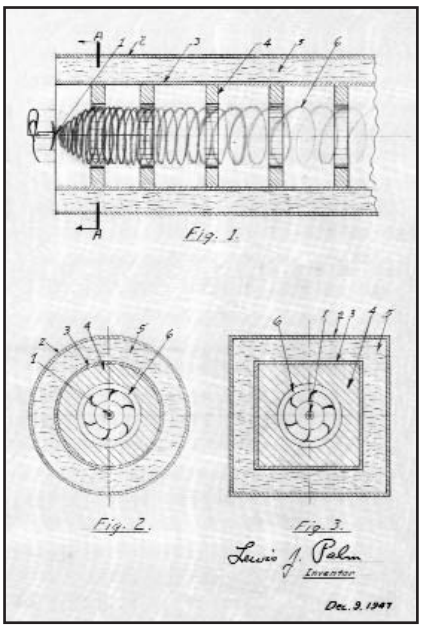

Customized Solution

Process Requirements → Conceptual Design → Practical Design → Fabrication → Installation & Startup → Customer Satisfaction

Save Time and Money

- Highly experienced staff with diverse expertise to design and build to unique specifications
- Collaborative Approach
- Single Source Responsibility
- Simplification of installations with common headers and utility connections
- Turnkey Operation
- Over 30 years experience designing and fabricating engineered systems

Capabilities

Applications Engineering

- Review Customers Specifications
- Customized System Solutions
- Component Specification and Selection
- Determination of Control Strategy

Project Engineering

- Single point project management of each custom order

Drafting

- **P&ID** (Piping and Instrumentation Diagram)
- **General Arrangement Drawings** (3D Autocad)
- Fuel Trains
- Electrical Ladder Diagrams
- Room Layout

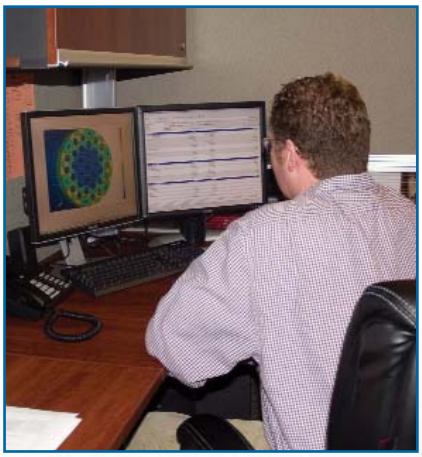

Service Department

- 24 Hour Service Support
- Startup Assistance
- On-Site Training
- Worldwide representative / distribution organization with regional service support

Manufacturing Facilities

Worldwide Capability

- Global Manufacturing Capability
- Manufacturing in the U.S., Great Britain, and China
- Sales and Engineering Office in Canada
- Full ASME Section I, IV and VIII Certification
- UL Panel Shop
- Worldwide Sales and Service Network
- Dedicated R&D Facilities

Strategy

- Highly skilled and certified production employees
- Self inspection and individual accountability
- Flexibility to meet custom applications
- Conservative design approach
- Hands on engineering
- Research and Development is key to future growth

Training, Engineering, & Service

Training


PSI# 002325

The Practicing Institute of Engineering, Inc.

CERTIFICATE OF COURSE COMPLETION

This certifies that _____ has completed

Steam Systems Training

Presented by: Carey Merritt & John Richards

Training Provider: Fulton Boiler Works

1.5 Professional Development Hour(s)*

Date & Location:

(Signature is not mandatory)

_____
Presenter/Instructor Signature

*To confirm the acceptance of these PDHs outside of NYS, please consult the licensure board of that state.
This educational activity has been evaluated & accredited by the Practicing Institute of Engineering, Inc.
~All PIE approved courses are HSW approved for AIA~
The Practicing Institute of Engineering, Inc.
385 Jordan Rd., Troy, NY 12180

- Classroom and hands-on
- Service, sales and engineering training
- Fulton employees are instructors
- Steam and hot oil system training is accredited for Continuing Education Units (CEU's) for professional engineers

Engineering Visits

- Our facilities are open door
- We encourage and welcome people interested in our products to visit our facilities
- An ideal way to see our quality
- View fabrication of your system in process
- Lunch and Learns by our Product Managers

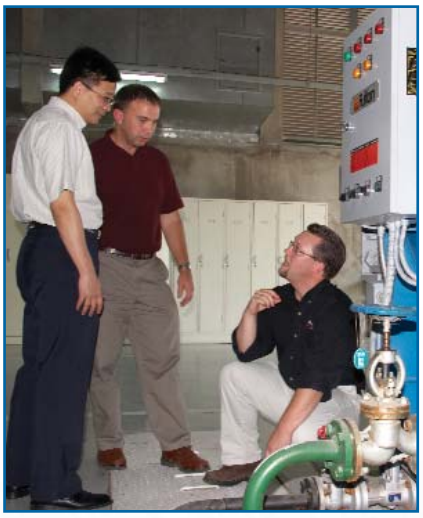

Service School

- Classes are segmented for each product line
- Actual boilers are supplied and operated for true "hands-on" training
- Fulton offers a classroom environment that encourages information sharing
- R & D facility dedicated to learning
- Instructors at Fulton have years of experience at the factory and in the field

Steam Systems

Steam System General Layout

- **Fulton can supply all of these components engineered as a solution**

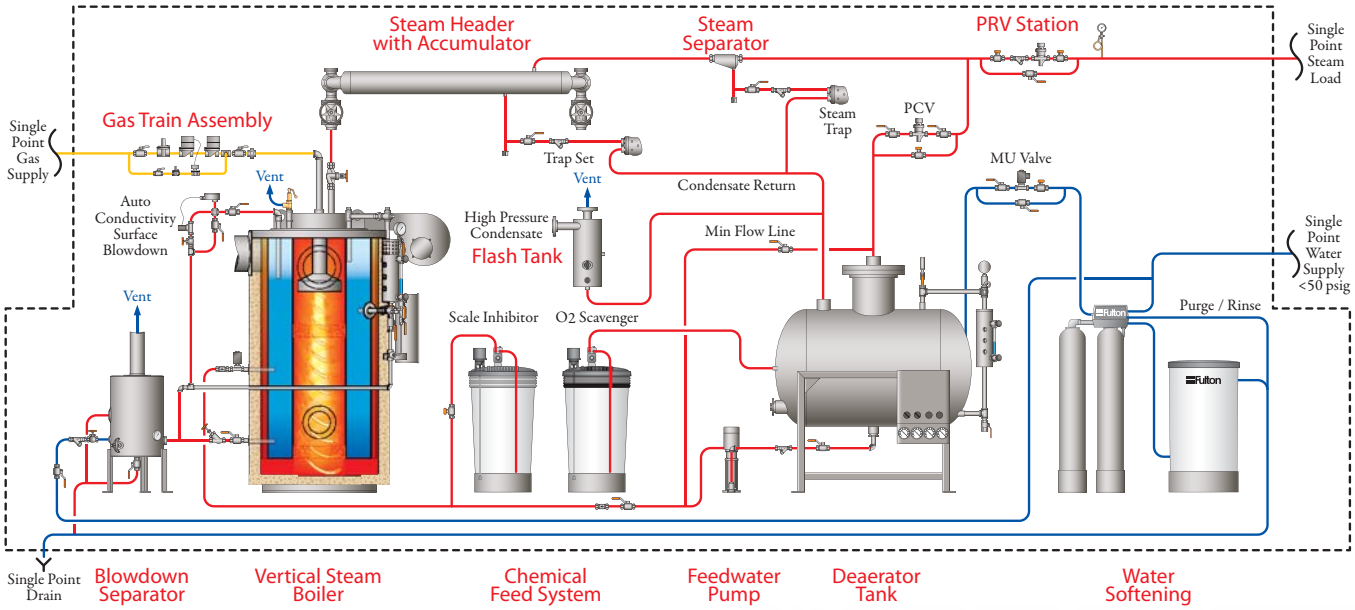

Applications

- **Building Heat**
- **Commercial Laundry**
- **Humidification**
- **Jacketed Kettles**
- **Process Heating**
- **Sterilization**
- **Ultra Clean Steam**

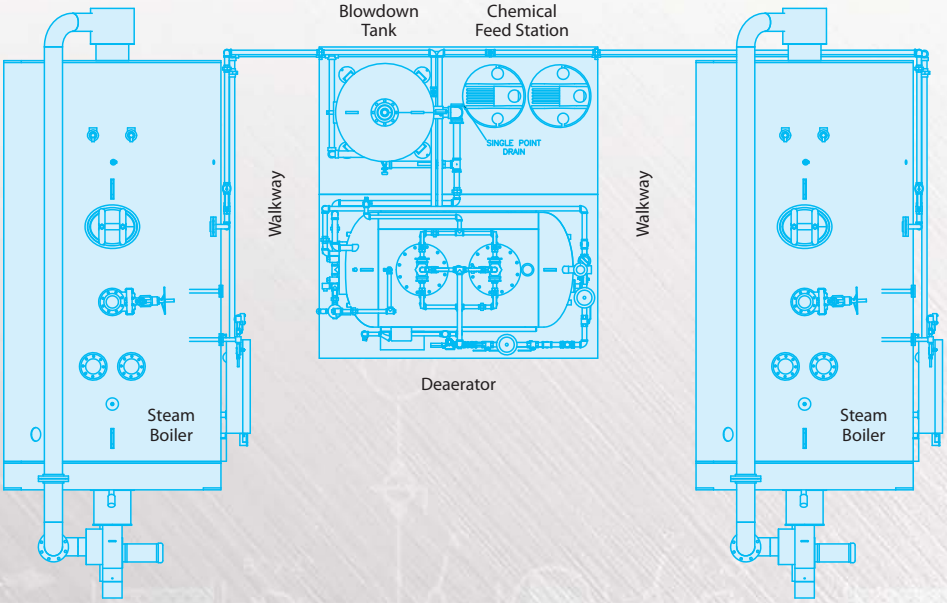

Overhead view of a pair of 250 HP Horizontal Firetube Steam Boilers skid mounted with Deaerator, Blowdown Tank and Water Treatment. Notice the custom piping to allow walkways between the boilers and accessory skid.

Steam Systems

Solution Components

- Fuel Fired High / Low Pressure Boilers
- Electric Boilers
- Unfired Steam Generators
- Boiler Lead-Lag Controls
- Superheaters
- Accumulators
- Flash Tanks
- PRV Stations
- Water Treatment Equipment
- Steam Headers
- Heat Exchangers
- Deaerators / Feedsets
- Blowdown Separators
- Heat Recovery Units
- Condensate Receivers / Surge Tanks

80 HP Steam Boiler packaged with a Feed System, Blowdown Separator and Water Treatment. In addition, a Stainless Steel Unfired Steam Generator was incorporated to use RO / DI water for clean steam generation.

Features & Benefits

(2) 30 HP Steam Boilers, Deaerator, Blowdown Separator and Water Treatment.

- **Small Footprint** - Custom Layouts
- **Redundancy** (N+1)
- **Durability** (PV Design)
- **Control** - BMS Operator Interfacing
- **Steam Quality / Quantity Considerations**
- **Complete Boiler Room Systems**
  (Including the Boiler Room Enclosure)

Commercial Heating Systems

Fulton provides customized Piping and Instrumentation Diagrams that define the hydronic loop design. Each P&ID is designed per the projects specific requirements.

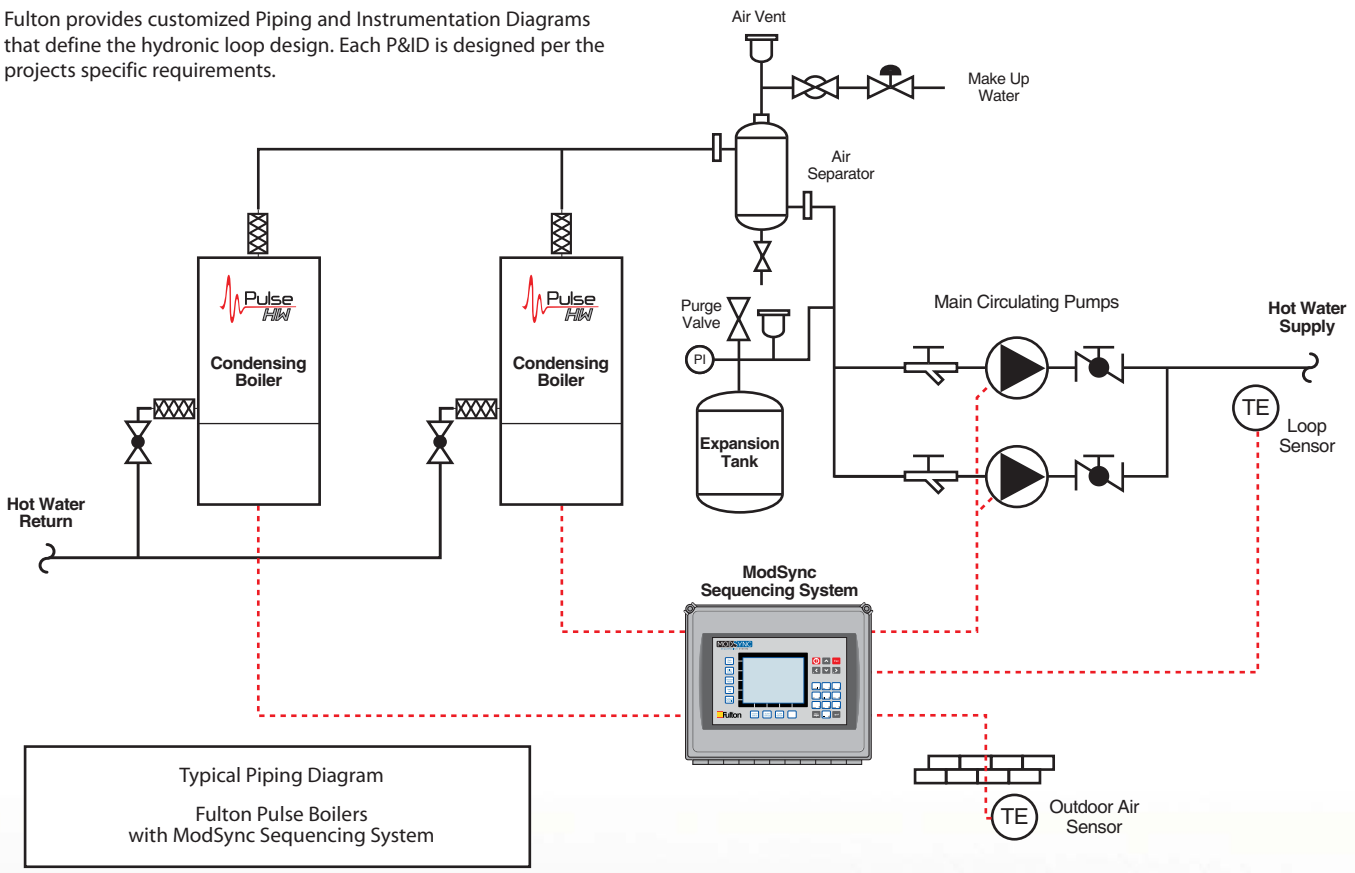

Typical Piping Diagram

Fulton Pulse Boilers
with ModSync Sequencing System

Applications

- Schools
- Universities
- Churches
- Commercial Buildings
- Food Applications
- Hospitals
- Military Bases
- Process Heating

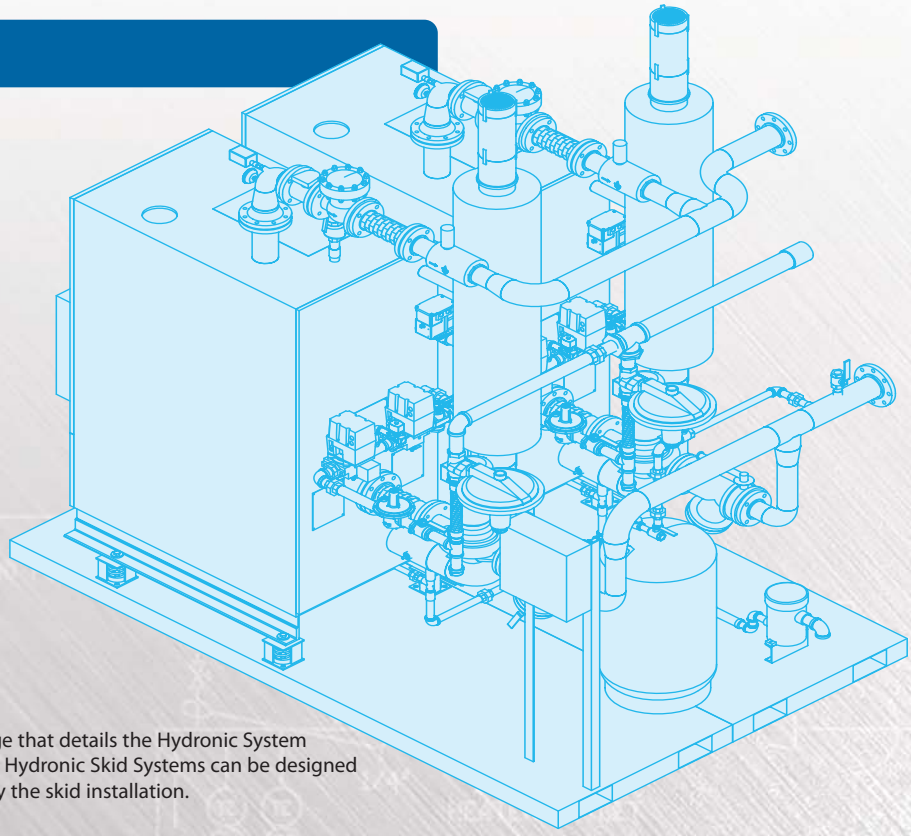

Our Drafting group develops a 3D drawing package that details the Hydronic System components and their orientation on the skid. The Hydronic Skid Systems can be designed to match a particular boiler room layout to simplify the skid installation.

Commercial Heating Systems

Solution Components

The Hydronic Skid System consists of two PHW-1400's designed for outdoor installation. The skid package includes the Main Circulating Pumps with Variable Frequency Drives, Air Separator, Expansion Tank, Circuit Setters and Associated Valves. Common HW supply and HW return connections were provided along with single point gas and electrical tie in points.

Features & Benefits

- **No Minimum Flow Rate**
- **No Minimum Return Water Temperature**
- **Single Source Responsibility**
- **Customized**
- **Simplified Installation**
- **Specialized Control Systems**

Five Vantage 3.0MM Btu/hr Condensing Boilers with common HW supply and HW return manifolds, Condensate Drain, single point gas and electrical supply.

Process Hot Water

Applications

- Chemical Processing
- Domestic Hot Water Generation
- Food Processing
- Paper and Pulp Processing
- Pharmaceutical Processing
- Plastics Processing

This Process Hot Water System contains a Horizontal Firetube Boiler with Circulating Pump, ASME Expansion Tank, Pneumatic Valve and a Stainless Steel Plate and Frame Heat Exchanger.

Solution Components

- Air Vents
- Expansion Tanks
- Heat Exchangers
- Instrumentation
- Section I or IV Hot Water Boilers
- Process Controllers
- Pumps
- Specialty Valves

This skid system supplies hot water to a heat loop. Fulton supplied a 4 HP Fuel Fired Hot Water Boiler, Duplex Circulating Pumps, Expansion Tank, Air Vent, Temperature Control Switches and Piping to make a nicely packaged unit.

Control Systems

ModSync Sequencing System

- Lead/Lag Sequencing
- Outdoor Reset
- Firing Rate Tuning
- Setback Schedule
- Auto/Manual Mode Control
- Multiple Setpoint Control Modes
- BMS Interface
- Hydronic System Interface
- Alarm Status and History
- SMS Text Messaging
- Customizable for Steam Boiler and Hot Oil Heater Applications

Control Packages

- PLC Systems
- Temperature Control Packages
- NEMA 12, 4, 7 Applications
- SCR Controls
- Modbus, BacNet and LonWorks compatible
- Remote Monitoring and Annunciation

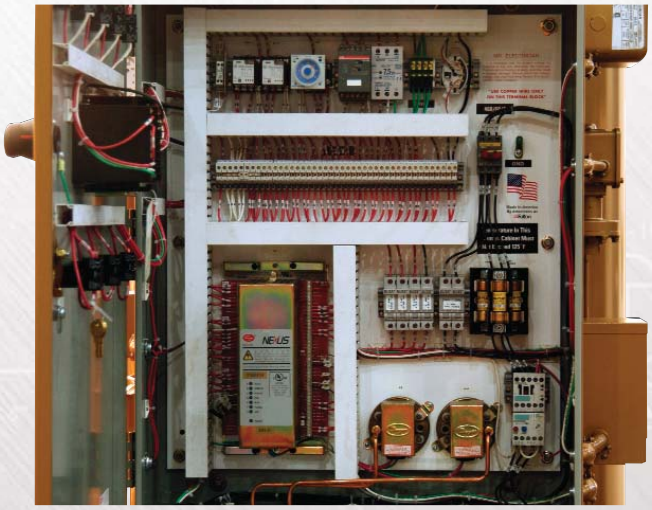

Thermal Fluid Systems

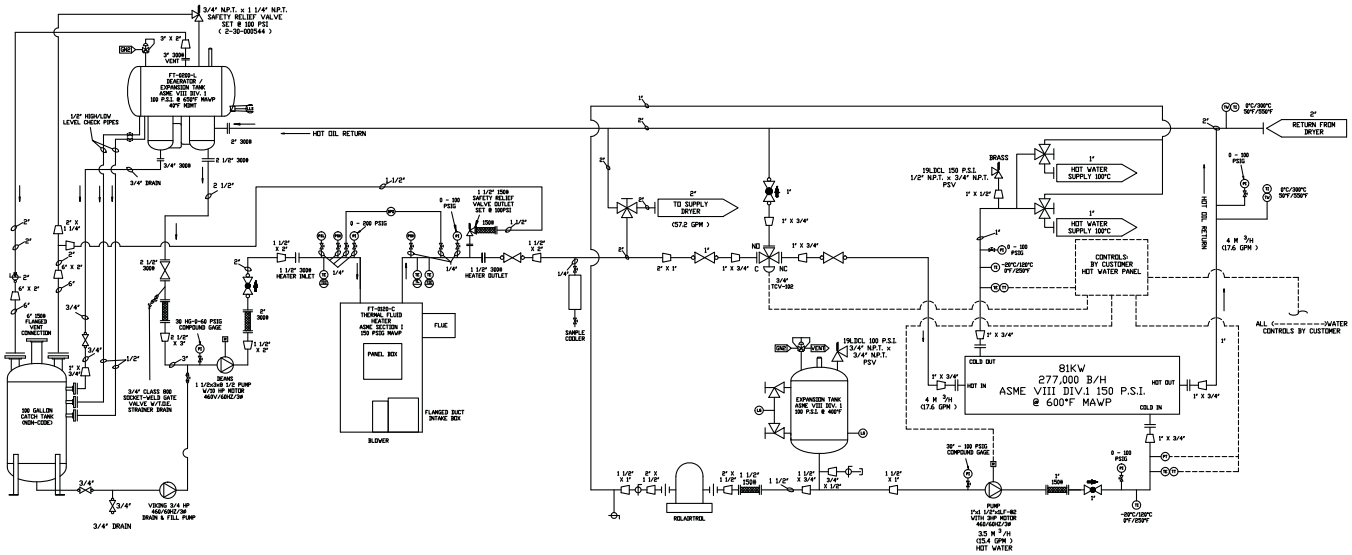

Applications

- Adhesives
- Asphalt
- Autoclaves
- Bio-Fuel
- Chemical Processing
- Drying / Water Treatment
- Food Processing
- Inks, Dyes & Paints
- Mining
- Plastics
- Tank Farms / Pipe & Pump Tracing
- Textiles

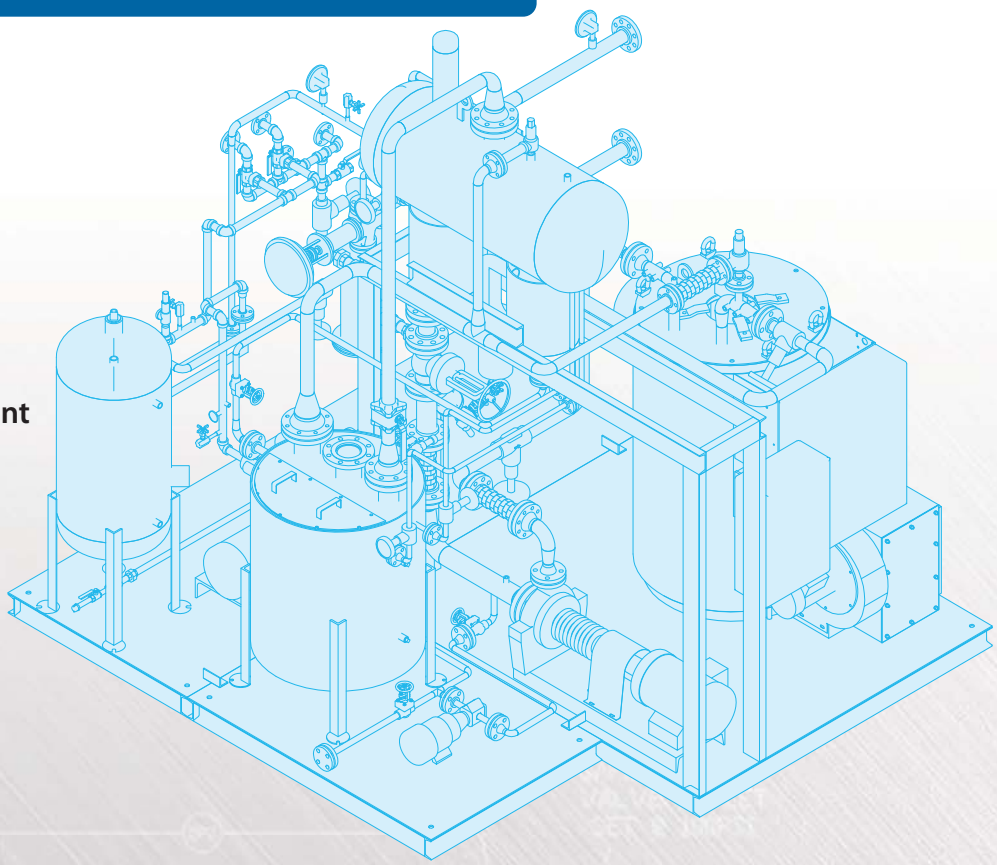

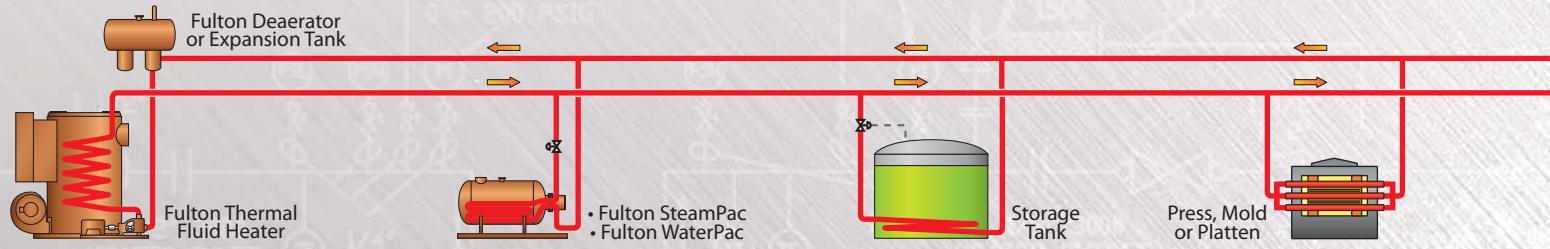

Thermal Fluid Systems

Solution Components

- Fuel Fired Vertical or Horizontal Thermal Fluid Heaters
- Combination Deaerator / Thermal Buffer / Expansion Tank
- Electric Thermal Fluid Heaters
- Circulating Pumps
- Unfired Steam or Hot Water Generators
- Skid Mounted Control Valves
- Primary / Secondary Loops
- Heating / Cooling Heat Exchangers

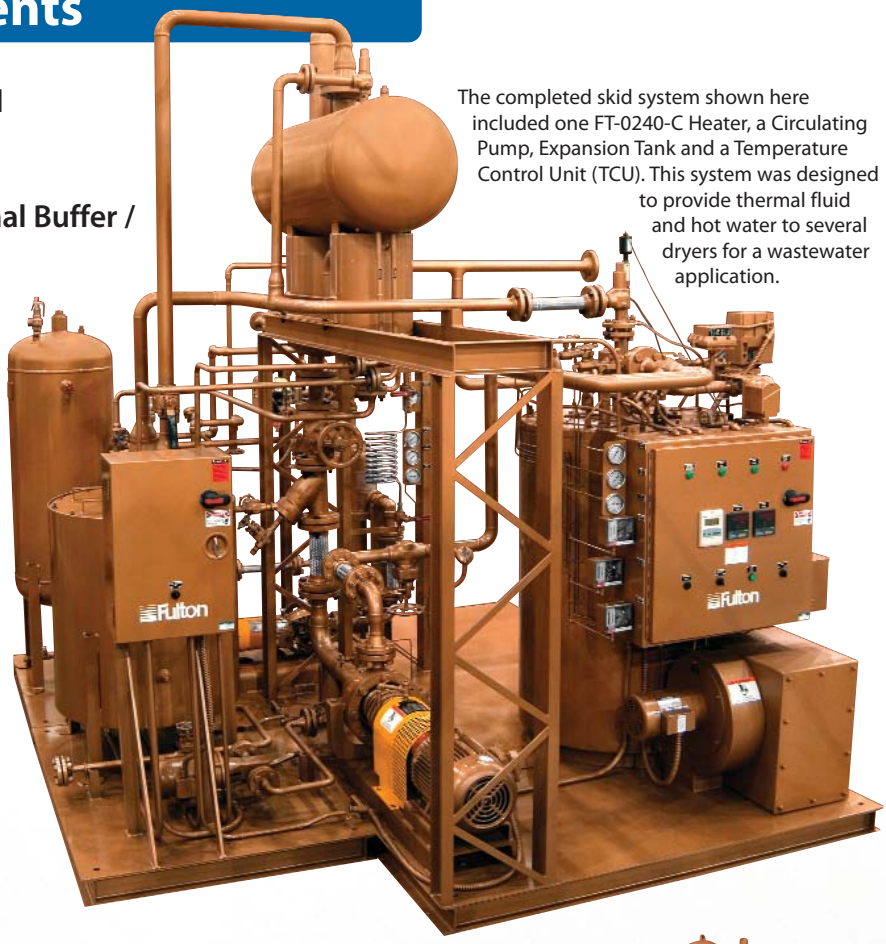

The completed skid system shown here included one FT-0240-C Heater, a Circulating Pump, Expansion Tank and a Temperature Control Unit (TCU). This system was designed to provide thermal fluid and hot water to several dryers for a wastewater application.

Custom Solutions

- Footprint
- Redundancy (N+1)
- Tight Temperature Control (to + / - 2 Degrees F)
- Durability
- Heat / Cool Systems
- Control Strategy (BMS Interfacing / PLCs)
- Single Source Responsibility

The FT-0600-C shown here supplies 600°F thermal fluid for a food processing application. The skid includes Modulating Valves to control fluid flow and a Bypass Valve to maintain flow throughout the heater at all times.

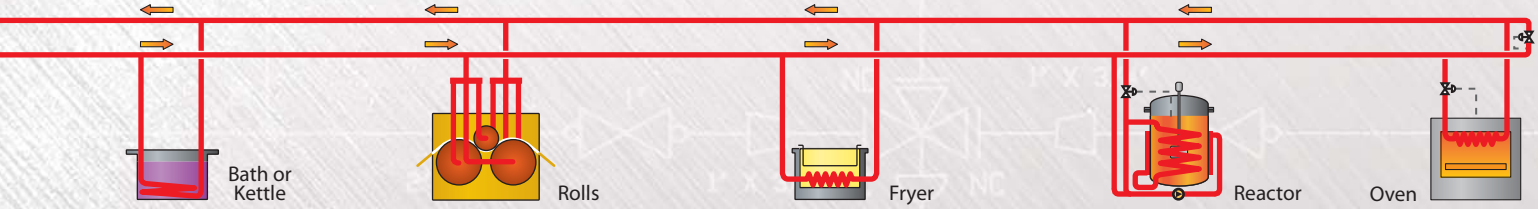

Temperature Control Units (TCU's)

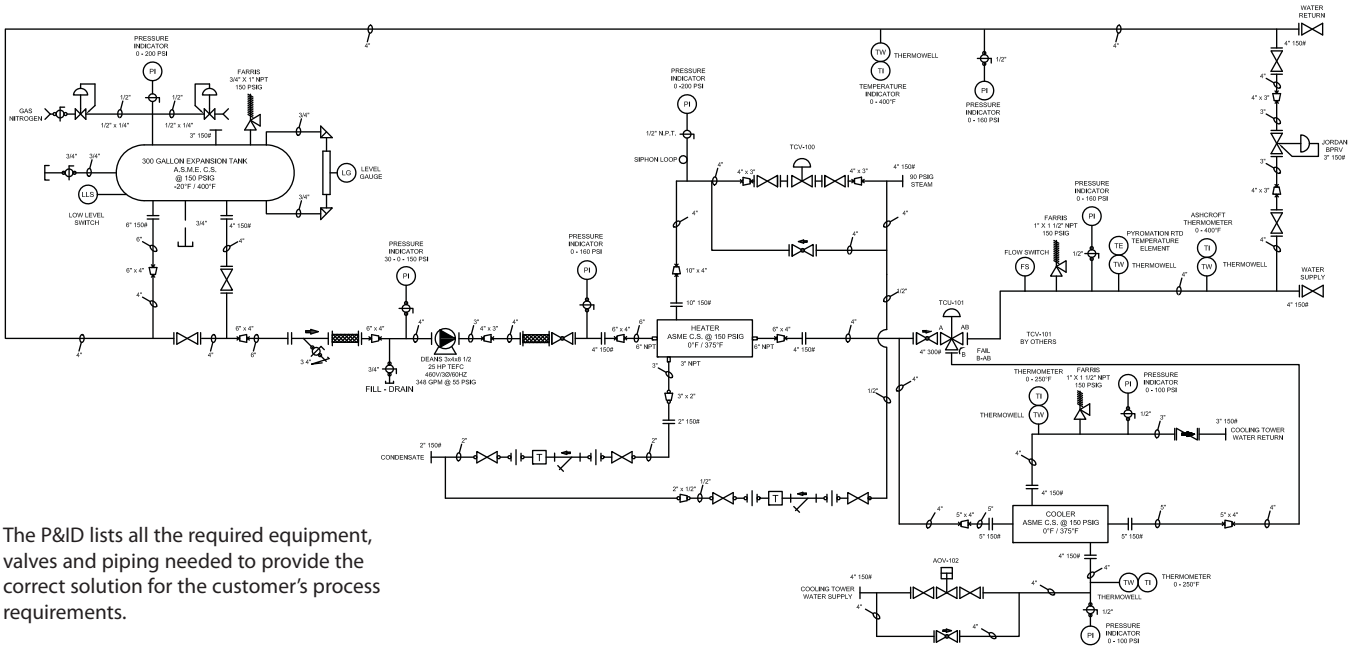

The P&ID lists all the required equipment, valves and piping needed to provide the correct solution for the customer's process requirements.

Applications

- Autoclaves and Batch Reactors
- Chemical Processing
- Distillation Columns
- Food Processing
- Heating and Cooling of Batch or Continuous Processes
- Inks / Dyes
- Pharmaceutical Processing
- Plastics
- Molds, Presses & Extruders
- Tray & Rotary Dryers
- Water Treatment

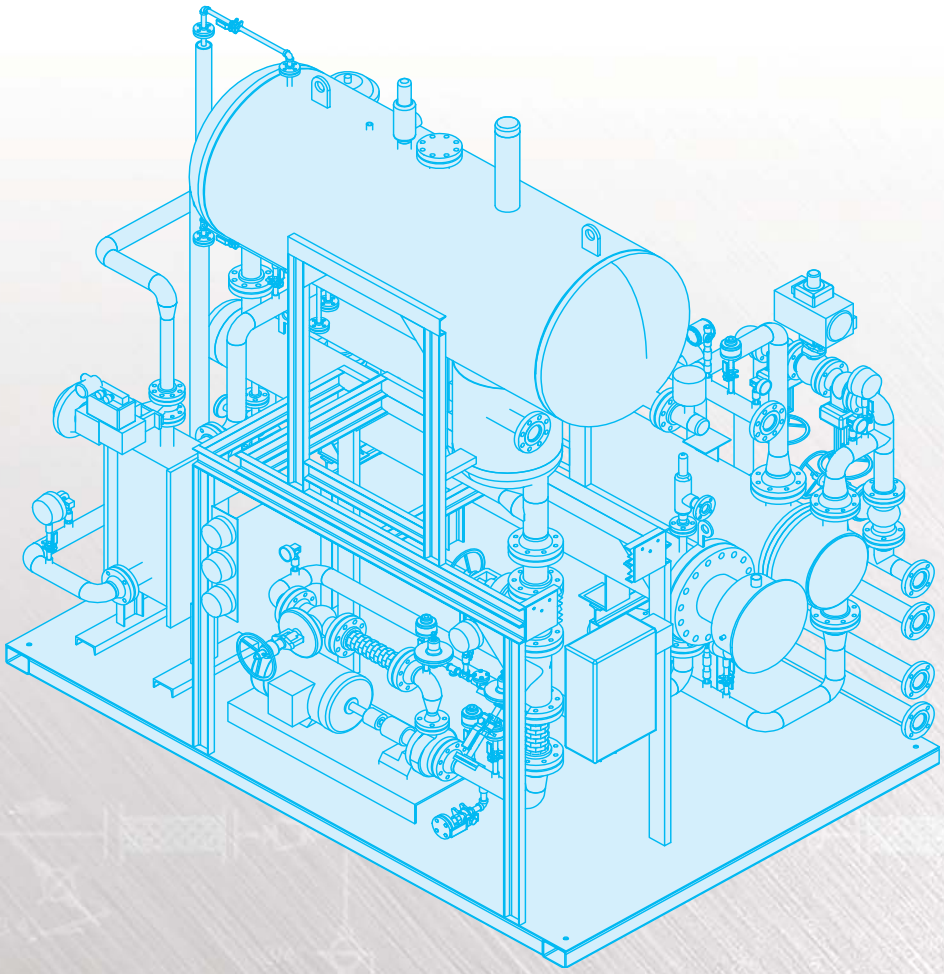

Temperature Control Units (TCU's)

Solution Components

- Customized Electric Heaters
- Shell & Tube Heat Exchangers
- Plate & Frame Heat Exchangers
- Welded Plate Exchangers
- Expansion Tanks
- Control Valves
- PLC's & Control Strategies
- Pumps

This TCU provides heating and cooling for a half-pipe reactor for pharmaceutical processing. Single fluid media is Syltherm XLT and operating ranges are -20°F to 400°F. Class 1 Division 2 group C&D controls were utilized.

Custom Solutions

- Small Footprint
- +/- 2°F Temperature Control
- Ease of Automation & Repetition for Validation of Processes
- Single Fluid Media
  - No cross contamination of utilities
  - No corrosion of heat transfer surfaces
- Fixed Ramp Rates

Water is used as the single fluid media for the TCU pictured here. Providing heating and cooling for rubber processing. Operating temperatures were between 40°F and 400°F for this highly cyclical application.

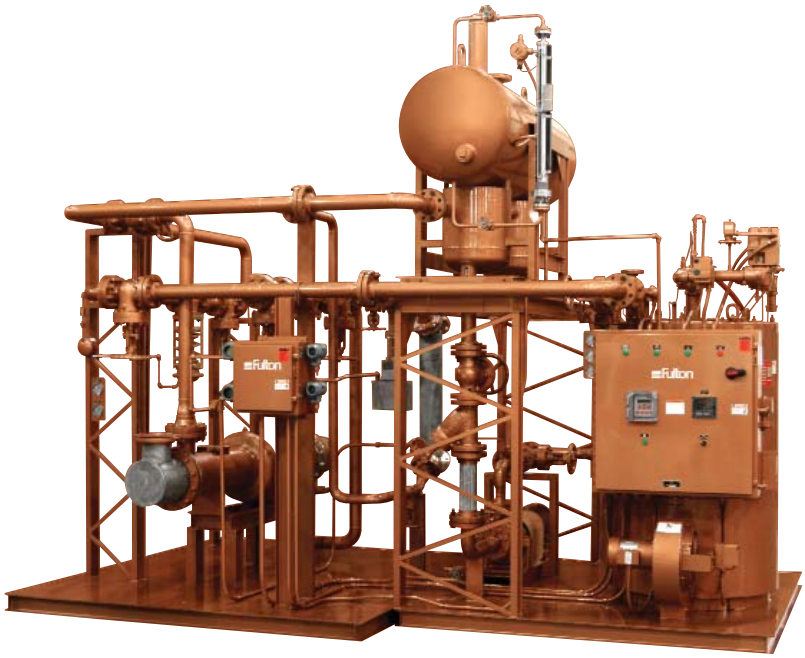

This Engineered System includes one FT-0240-C thermal fluid heater with a skid mounted circulation pump and FT-0500-L expansion tank. The system also includes two specialty heat exchangers. One exchanger uses thermal fluid to heat water, while the other heat exchanger is used to heat ethylene glycol.

Fulton®

The Fulton Companies
972 Centerville Road
Pulaski, NY 13142

Call: (315) 298-5121
Fax: (315) 298-6390
www.fulton.com

Fulton is a global manufacturer of steam,
hot water & thermal fluid heat transfer systems

EngSys BRO
010708
Printed in USA